DIFFERENTIAL OIL SEAL

COMPONENTS

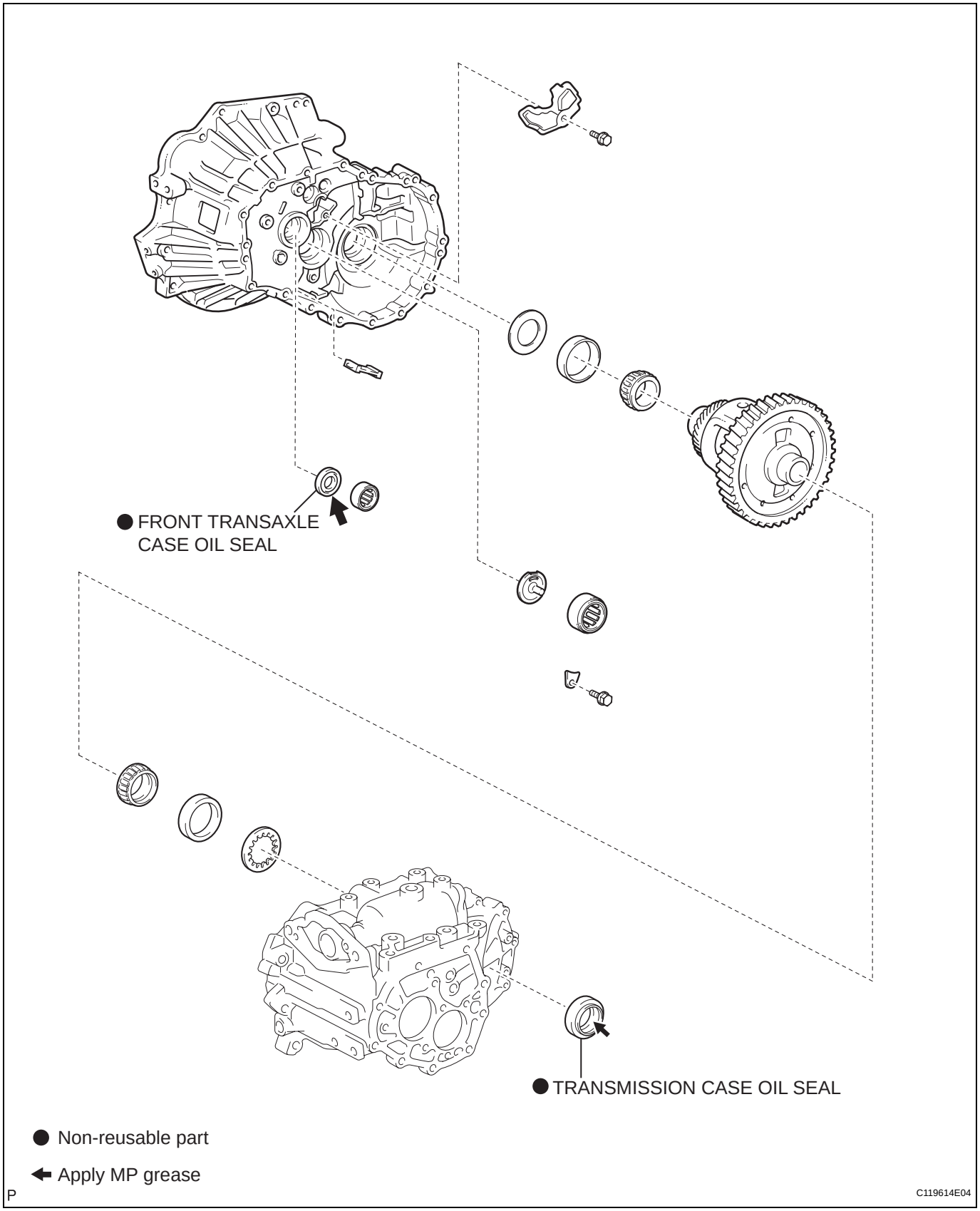

cardiagn.com

REMOVAL

1. **DRAIN MANUAL TRANSAXLE OIL**
2. **REMOVE FRONT WHEELS**
3. **REMOVE ENGINE UNDER COVER LH**
4. **REMOVE ENGINE UNDER COVER RH**
5. **REMOVE FRONT DRIVE SHAFT ASSEMBLY LH (See page DS-6)**
6. **REMOVE FRONT DRIVE SHAFT ASSEMBLY RH (See page DS-6)**
7. **REMOVE FRONT TRANSAXLE CASE OIL SEAL**
   (a) Using SST, remove the oil seal.
   SST 09308-00010

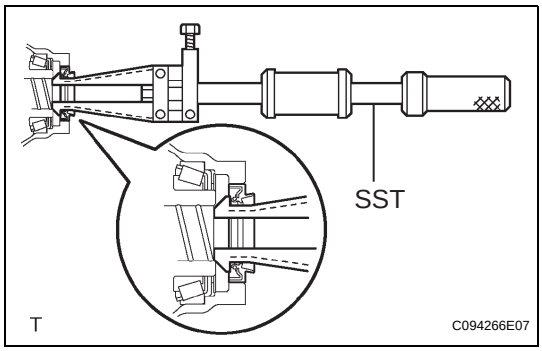

8. **REMOVE TRANSMISSION CASE OIL SEAL**
   (a) Using SST, remove the oil seal.
   SST 09308-00010

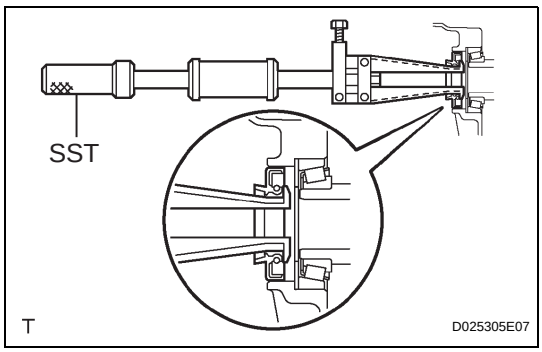

INSTALLATION

1. **INSTALL FRONT TRANSAXLE CASE OIL SEAL**
   (a) Coat a new oil seal lip with MP grease.
   (b) Using SST and a hammer, install the oil seal.
   SST 09554-14010, 09950-70010 (09951-07200)
   Drive in depth:
   1.9 +- 0.3 mm (0.075 +- 0.012 in.)
   NOTICE:
   Be careful not to damage the oil seal lip.

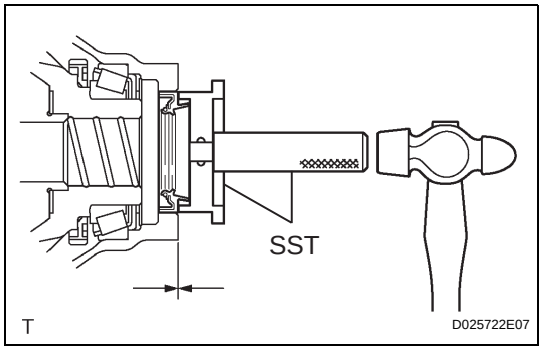

MX

cardiagn.com

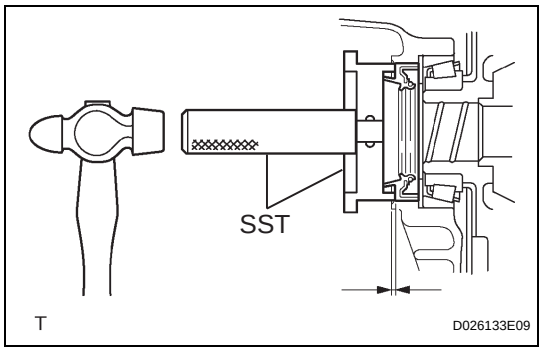

2. INSTALL TRANSMISSION CASE OIL SEAL

(a) Coat a new oil seal lip with MP grease.

(b) Using SST and a hammer, install the oil seal.

SST 09554-14010, 09950-70010 (09951-07200)

Drive in depth:

9.9 +- 0.3 mm (0.390 +- 0.012 in.)

NOTICE:

Be careful not to damage the oil seal lip.

3. INSTALL FRONT DRIVE SHAFT ASSEMBLY LH (See page DS-12)

4. INSTALL FRONT DRIVE SHAFT ASSEMBLY RH (See page DS-12)

5. INSTALL FRONT WHEELS

Torque: 103 N*m (1,050 kgf*cm, 76 ft.*lbf)

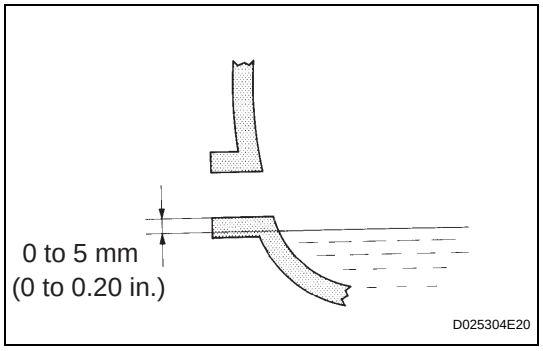

6. ADD MANUAL TRANSAXLE OIL

(a) Add the manual transaxle oil.

Oil grade:

API GL-4 or GL-5

Viscosity:

SAE 75 W-90

Capacity:

1.9 liters (2.0 US qts, 1.7 Imp. qts)

Torque: 39.2 N*m (400 kgf*cm, 29 ft.*lbf)

7. INSPECT AND ADJUST MANUAL TRANSAXLE OIL

8. CHECK ABS SPEED SENSOR SIGNAL

(a) Anti-lock Brake System (See page BC-7)

(b) Vehicle Stability Control System (See page BC-83)

cardiagn.com